A8V Series Piston Variable Displacement Pump

Product show and brief introduction

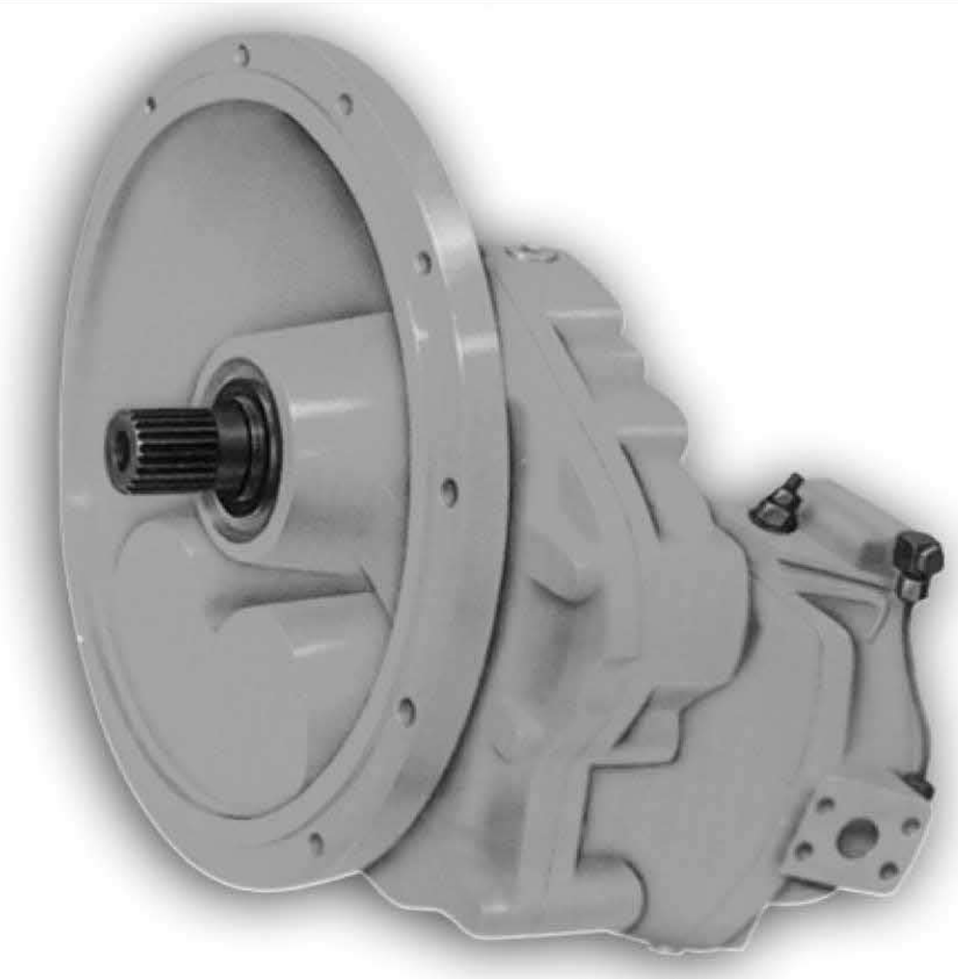

说明：

- 主要部件有共用一个外壳的两个变量泵，分动箱，直接安装在原动机上的SAE法兰及控制装置－通常是叠加HP控制。
- 流量与转速和排量成正比，并可通过改变倾角来无级变化。

特点：

- 带有辅助驱动的不同结构方案及多回路控制的可能性，使它可与各种驱动应用最佳匹配。
- 结构紧凑，易于安装与保养。
- 压力高、耐冲击，工作寿命长。

Description

Two variable pumps in a common housing, the splitter box, an SAE flange for direct mounting on to the prime mover and the control device—usually summation HP control.
Flow is proportional to speed by change the swivel angle.

Special Features

The various design options with auxiliary drive and the possibility of multi-circuit control allow optimum matching to individual drive applications.

剖视图：

Section：

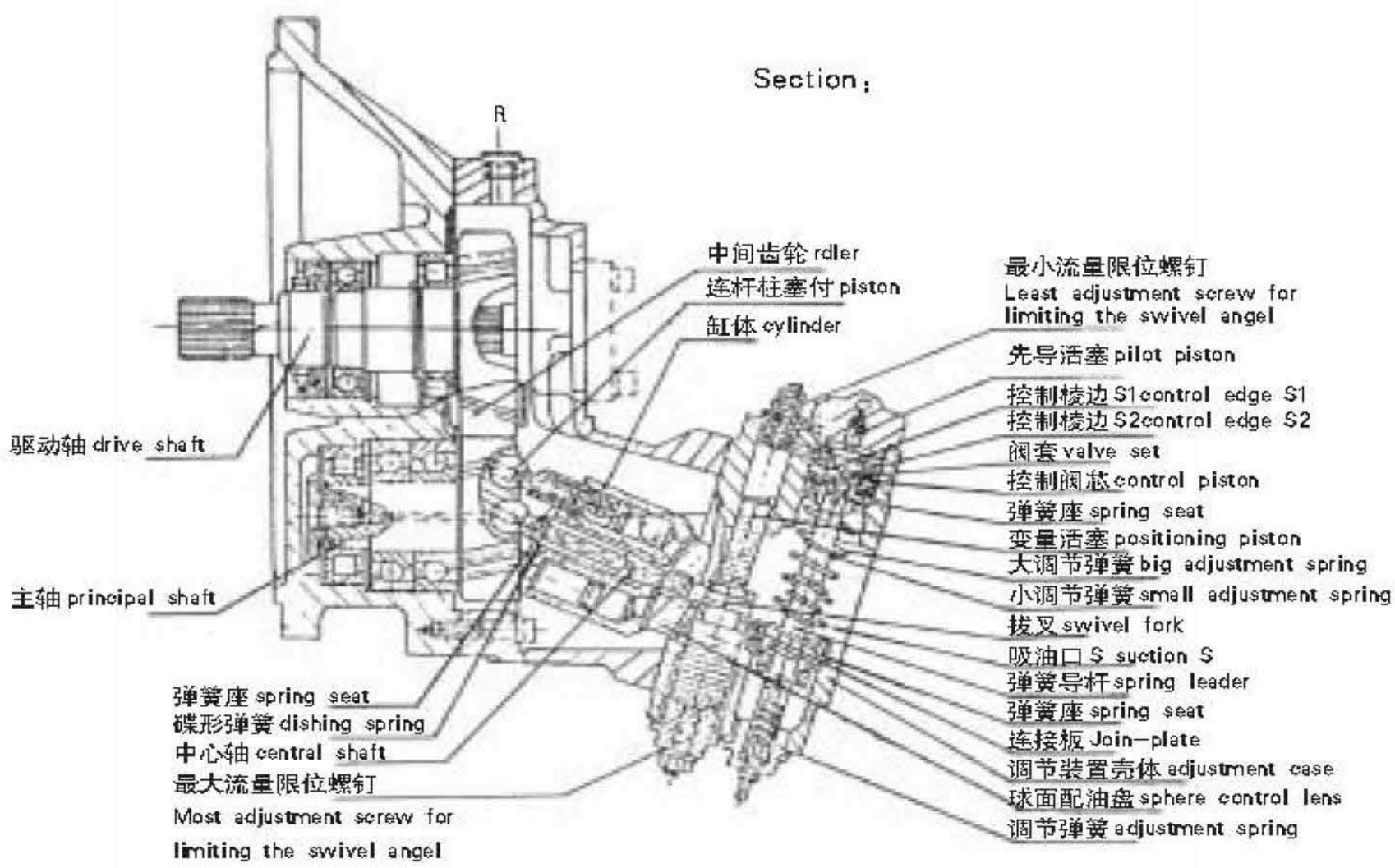

A8V	55	SR	1.1	R	1	0	1	F	1

泵型号 Pump Type

变量双泵 Variable Displacement Double Pump

规格 Size

8.1–28.1ml/r	28
15.8–54.8ml/r	55
0–58ml/r	58
23.1–80ml/r	80
30.8–107ml/r	107
21.8–125ml/r	125
46.2–160ml/r	160

(每个旋转组件的排量 V_{gmin}–V_{gmax})
(Displacement V_{gmin}–V_{gmax} perrotary group)
只有 DM.LL 控制方式
Only exist control device DM.LL

控制方式 Control Device

总功率变量 Summation HP control	SR
分功率变量 Individual power control	LL
分功率交叉变量 Cross-sensing control	LLC
恒压手动变量 Constant pressure and manual control	DM

结构 Design

见下	See below	1.1
		1.2
		2
		3
		4
		5

行程限位 Stroke Limiter

固定的	fixed	1
液控的	hydraulic	2
机械的 (2.3 不用于规格 28)	mechanical (2.3not for Size 28)	3

压油口连接 Pressure Connection

螺纹(用于规格 28)		G
法兰	SAE SAE flange connection	F

吸油口连接 Suction Connection

SAE 法兰	SAE flange	1

速比 Gear Ratio

规格 size		28	55	58	80	107	125	160	
代号 Ratio	0	–	1.00	–	1.00	1.00	1.00	1.00	0
代号 Ratio	1	0.73	0.75	0.87	0.87	0.85			1
代号 Ratio	2	0.86	0.93	1.06	1.06	1.08			2
代号 Ratio	3	–	1.17	–	1.35	1.23			3
代号 Ratio	4	–	0.84	0.81	–	–			4
代号 Ratio	5	–	1.05	–	1.18	–			5

系列 Series

1

旋转方向(从轴端看) Direction of Rotation(View ed on shaft end)

顺时针	Clock wise	R

结构 Design 1.1–5

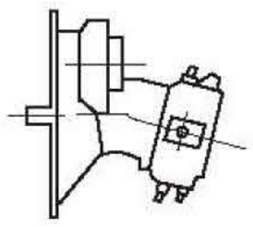

1.1 不带减速齿轮
带辅助驱动
without adaptor gear
without auxiliary drive

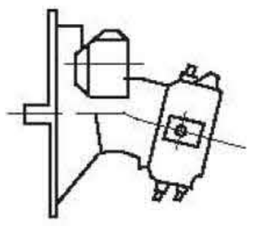

1.2 不带减速齿轮
带辅助驱动
without adaptor gear
without auxiliary drive

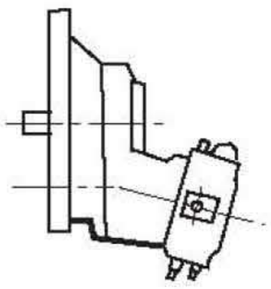

2 带减速齿轮
不带辅助驱动
without adaptor gear
without auxiliary drive

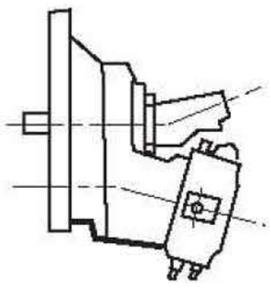

3 带减速速齿轮
带辅助驱动和安装
A2F 23.28
(带花键轴)的联轴节
with adaptor gear
with auxiliary drive and
coupling for mounting of
a fixed pump A2F 23.28
(with splined shaft)

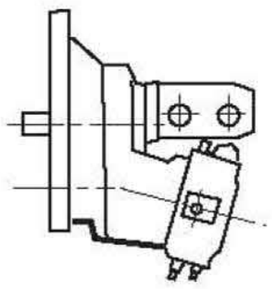

4 带减速齿轮
带辅助驱动可安装齿轮泵
with adaptor gear
with auxiliary drive and
coupling for mounting of
a gear pump with
tapered shaft and bolton)

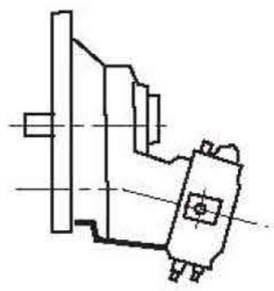

5 带减速齿轮
带辅助驱动、有盖板
with adaptor gear
with auxiliary drive,
plugged.
(with cover)

订货示例：

A8V,55,SR,1.1,R,1,0,1,F,1

变量双泵A8V，规格55,总功率变量，结构1.1，顺时针旋转，1系列，速比1.00，吸油口1 ，SAE压力油口，固定行程限位器。用于辅助驱动的泵应在订货时单独列出。

Ordering Example

A8V,55,SR,1.1,R,1,0,1,F,1

Variable Displacement Double Pump A8V,Size55,Summation HP Control,Design1.1,Clockwise rotation,Series 1,gear ratio 1.00,Suction Connection 1, SAE Pressure connection,fixed stroke limiter .Pimps for auxiliary drive should be listed separately when ordering.

技术参数 Technical Data

工作压力范围：Operating Pressure Range：

A 或 B 口压力：Pressure at port A or B.

额定压力：Nominal pressure _____ P_n=35MPa

最高压力：Peak pressure _____ P_{max}=40MPa

吸油口的绝对压力：Absolute pressure on the suction inlet S

P_{absmin} _____ 0.08MPa

P_{absmax} _____ 0.2MPa

油温范围：Fluid Temperature Range：

t_{min} _____ −25℃

t_{max} _____ 80℃

粘度范围：Viscosity Range：

V_{min} _____ 10mm²/s

V_{max} _____ (短时)(for short periods)100mm²/s

最佳工作粘度：Operating Viscosity：

V_{opt} _____ 16−36mm²/s

油液选择：Fluid Recommendation

工作温度 推荐粘度等级符合DIN 51519
Operating Recommended Viscosity grade
temperature to DIN51519
range ISO(VG)

30−40℃	VG22=22mm²/s	在 at40℃
40−50℃	VG32=32mm²/s	在 at40℃
50−60℃	VG46=46mm²/s	在 at40℃
60−70℃	VG68=68mm²/s	在 at40℃
70−80℃	VG100=100mm²/s	在 at40℃

液压油的过滤：Filtration of Hydraulic Fluid

推荐过滤精度为10∝m。亦可使用25−40∝m。使用10∝m的可以延长使用寿命(降低磨损)。

Recommended filtration 10∝m.Coarser filtration of 25 to 40∝m is possible, however longer service life is achieved with filtration of 10 ∝m (reduced wear).

转速范围：Speed Range

最低转速没有限制，最高转速 n_{Amax} 见下表

No limitation on minimum speed n_{min}.

See data table for max.permissible speeds n_{Amax}.

安装位置：Mounting Position

驱动轴水平安装。其它位置也可以，但事先应询问本厂

Horizontal, as referred to the drive shaft; other positions are possible, but require prior consultation with us.

辅助驱动的输出转速与输入转速 n_A 相同 。(结构3,4,5)

Output speed of the auxiliary drive is the same as input speed n_A(Design 3,4,5)

辅助驱动速比：Auxiliary Drive Gear Ratio

结构	规格	Size			
Design	55	80	107	125	160
1.1	1.244	1.333	1.256		
1.2	1.00	1.00	1.00	1.00	1.00

旋转方向(从轴端看)：Direction of rotation (Viewed on Shaft)

结构1.1(Design 1.1)：逆时针(anti−Clockwise)

结构1.2(Design 1.2)：顺时针(Clockwise)

(理论值、未考虑 η_{mh} 和 η_v，数值经过园整)　　(theoretical values, without considering mb and v, Values rounded off)

规格 Size	单侧泵排量 V_{gmax} Displacement of double pump per rotary group V_{gmax}(ml/r)	分动箱齿轮速比 Splitter box gear ratio $i=\frac{n_A}{n_p}$	最大驱动转速 n_{Amax}(r/min) 当明油口 S 绝对压力为 P 及排量为 V_{gmax} 时 Max.drive speed n_{Amax}(r/min)for (absolute)pressure P at suction inlet S and max.displ.V_{gmax} P=0.09MPa	P=0.1MPa	P=0.15MPa	双泵最大流量 Q_{max}(l/min)(考虑 3% 的容积损失)在对应转速下 Max.flowQ_{max}(l/min)of double pump(displacement losses of 3%included)at speed n0.09	n0.1	n0.15	双泵驱动功率 P(KW) Drive power P(kw) of double pump, with △p1+△p2=35MPa (start of control)and Q_{max} at speed n0.09	n0.1	n0.15	惯性矩 J(kgm²) Moment of inertia J(kgm²)	重量 kg Weight kg
28	28.1	0.729	2040	2185	2350	2 × 76	2 × 82	2 × 88	46	49	53	0.014020	54
		0.860	2410	2580	2770							0.009351	
55	54.8	1.000	2360	2500	2640	2 × 125	2 × 133	2 × 140	75	80	84	0.012475	100
		0.745	1760	1860	1965							0.03743	
		0.837	1975	2090	2210							0.02818	
		0.9318	2200	2330	2460							0.02175	
		1.051	2480	2625	2775							0.01639	
		1.1714	2765	2930	3090							0.012977	
58	58.8	0.8125	2315	2435	2720	2 × 165	2 × 174	2 × 194				0.06189	130
		0.8667	2470	2600	2900							0.05590	
		1.054	3000	3160	3530							0.3579	
80	80	1.000	2120	2240	2370	2 × 164	2 × 174	2 × 184	99	105	111	0.02680	130
		0.8666	1840	1940	2055							0.05590	
		1.054	2235	2360	2500							0.03579	
		1.181	2505	2645	2800							0.02797	
		1.3448	2850	3010	3185							0.02137	
107	107	1.000	1900	2000	2135	2 × 197	2 × 208	2 × 222	119	125	133	0.03625	165
		0.8431	1600	1685	1800							0.08257	
		1.075	2040	2150	2295							0.047012	
		1.2285	2335	2455	2625							0.035353	
125	125	1.000	1900	2000	2135	2 × 230	2 × 242	2 × 258	139	146	156	0.055	180
160	160	1.000	1750	1900	2100	2 × 271	2 × 284	2 × 325	164	178	196	0.064	200

总功率变量

SR总功率变量是一种与压力有关的先导控制，可无级同步调节双泵的倾角，从而在V_{gmax}至V_{gmin}范围内调节泵的排量，流量与系统压力成反比，以保持液压功率恒定。

总功率变量是以两个压力之和(P_1+P_2)来进行控制的，因此，当一个泵要较小功率时，其余功率可作用于另一个泵。在极端情况下，任一个泵都可得到最大功率。

Summation HP Control

Summation HP control SR is a pressure related, pilot operated control which steplessly adjusts the swivel angle, and thus the displacement, of the under-coupled pumps in the range V_{gmax} to V_{gmin}. Flow is inversely proportional to system pressures, thereby maintaining hydraulic power constant. Summation HP control means control using the sum of the two pressure (P_1+P_2). If one pump requires less power, then the remaining power is available to the other pump. In extreme cases, either pump can be supplied with the maximum power.

$$P=\frac{(P_1+P_2)\cdot Q}{60\cdot\eta_t}=\text{恒量}$$ constant

P= 驱动功率	drive power	[kw]
P_1P_2= 压力	pressure	[MPa]
η_t= 总效率	overall efficiency	
Q= 流量	flow	[L/min]

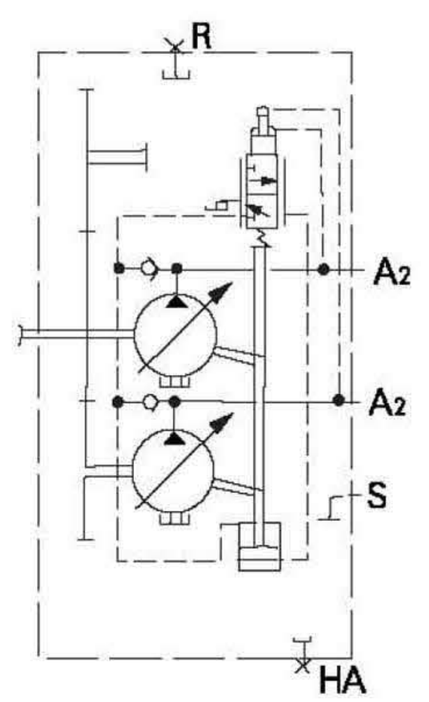

A8V…SR
结构 Design1.1

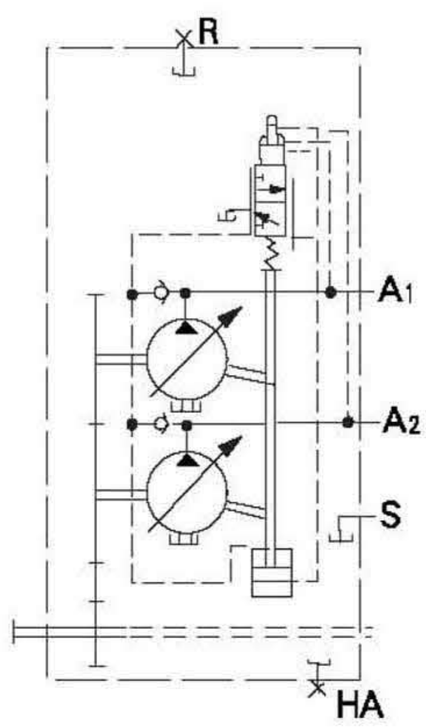

A8V…SR
结构 Design2-5

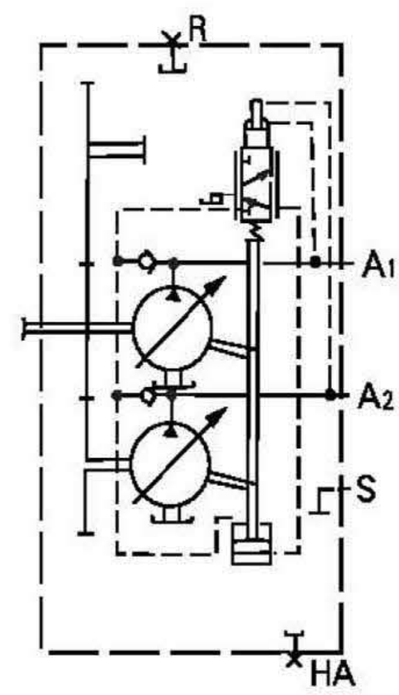

A8V…SR
结构 Design1.2

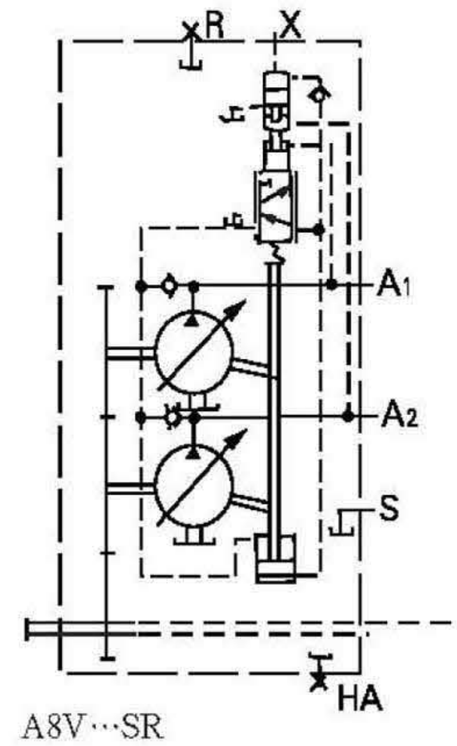

A8V…SR
结构 Design2-5
带液压行程限位
with hydraulic stroke limiter

接口	connections
A1,A2 工作油口	suction line
S 吸油口	suction line
R 排气口	air bleed
HA 放油口	oil drain
X 先导压力口	pilot pressure

辅助装置: 行程限位器Auxiliary Device:Stroke Limiter固定的—用限位螺钉把最大流量固定于所需的V_{gmax}上(订货时注明数值)。

机械的——通过机械行程 限位可无级地改变或限制最大排量，调节范围从V_{gmax}到V_{gmin}。

液压的——用附加的液压行程限位器，可无级地改变或限制最大排量，调节范围从V_{gmax}(固定设置)到V_{gmin}。

液压行程限位器所需先导(x油口)不低于工作压力(P_1+P_2)的1/14,但x口的最低压力不低于0.7MPa,最高允许压力为5MPa(所有规格)。

The fixed setting of the max.flow at the required value V_{gmax} is made by means of a stop screw (please indicate require value in clear text when ordering). By means of mechanical stroke limiter, the max. displacement can be steplessly varied of limited. Adjustment range from V_{gmax} to V_{gmin}.

By means of an additional hydraulic stroke limiter, the max.displacement can be steplessly varied of limited. Adjustment range is from V_{gmax}(fixedsetting)to V_{gmin}.

A pilot pressure(port X) of at least 1/14 of the operating pressure (P1+P2)is required for the hydraulic stroke limiter;however,min. pressure at port X must not 0.7MPa.Max.Permissible pressure is 5MPA (for all Sizes)

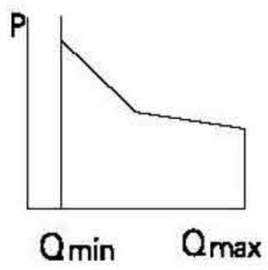

固定的 fixed setting

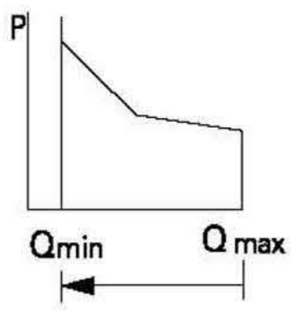

调节范围
adjustment range
机械的 mechanical
液压的 hydraulic

通用变量特性曲线　　Control Curve(general)

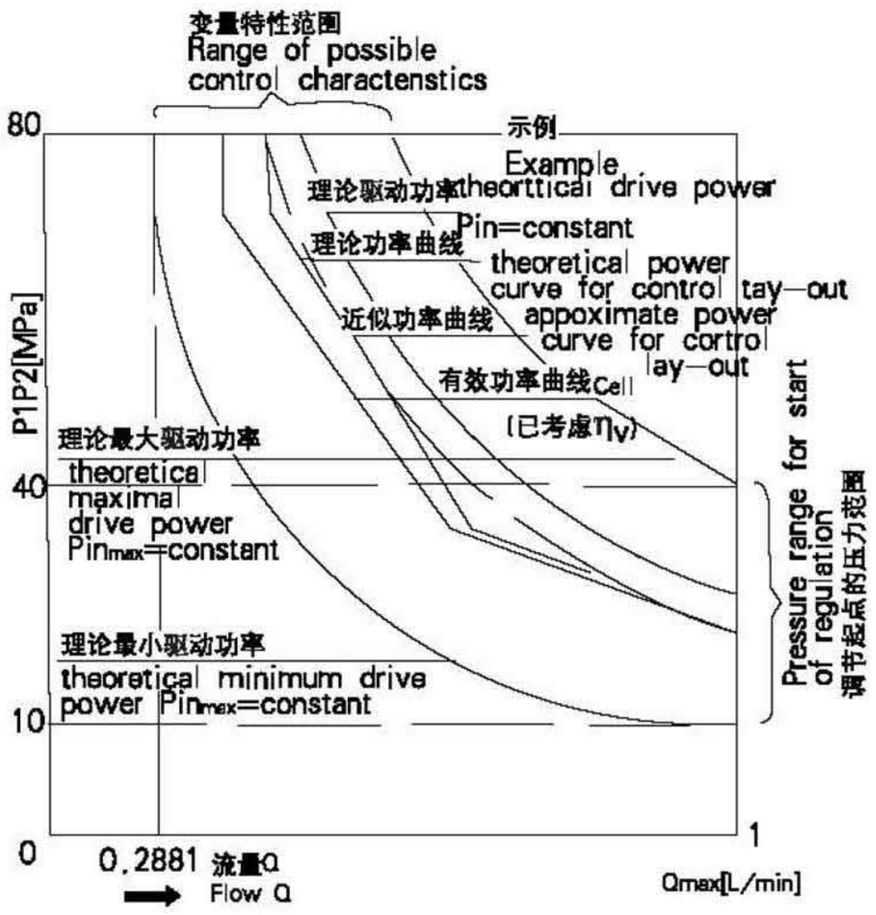

变量起点的压力范围 10-40MPa 为两泵之压力总和，P1= 泵 1 的压力，P2= 泵口的压力，每个驱动均有一个特定的功率曲线。

Pressure range at start of control 10-40MPa total summated pressure P1=pressure from pump 1,P2=pressure from pump 2. Special curves are produced for each individual drive.

恒压手动变量

Constant Pressure and Manual Control DM

恒压物动变量是一种分功率调节控制，一泵为恒压变量泵，一泵为手动变量泵，排量在0-58ml范围内可调，恒压变量在其变量范围内保持系统压力恒定，不受泵流量变化的影响，变量泵仅供应工作必须的油液体积。如果压力超过设定值，则泵自动摆回小角度。压力设定范围 5-35MPa。△Pmax=1MPa。

Constant pressure and manual control DM is an individual power control. One pump is a constant pressure control, the other pump is a manual control, and the displacement is adjustable is the range 0 to 58ml.

The constant pressure control maintains the pressure in a hydraulic system constant within its control range in spite of changing pump flow requirements. The variable pump supplies only the volume of fluid required by the services. Should operating pressure exceed the set pressure, the pump is automatically swivelled back to a smaller angle. Setting range from 5 to 35MPa . △Pmax=1MPa.

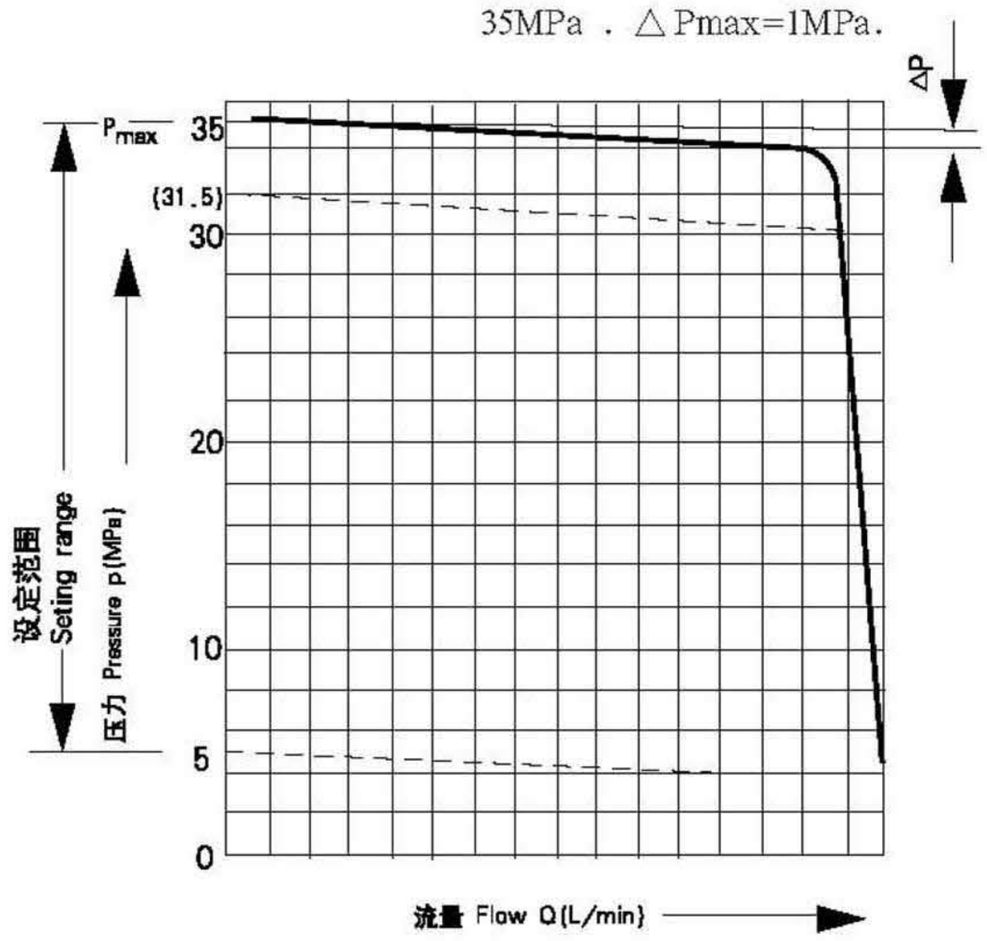

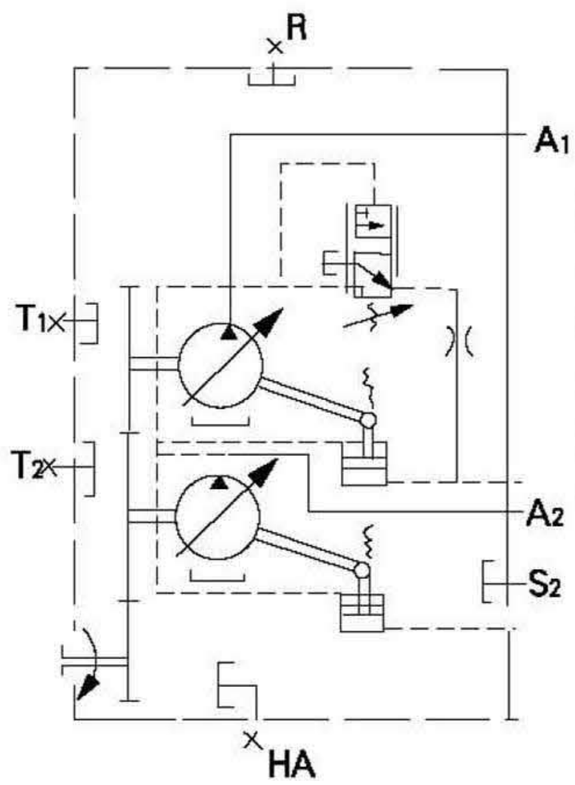

接口	Connections
A1,A2 工作油口	service lines
S 吸油口	suction line
R 排气口	air bleed
HA 放油口	oil drain
T1,T2 冷却冲洗口	connection for flushing fluid

DM 恒压手动变量　　Constant pressure and manual control DM

元件尺寸，规格 55、80 和 107　Unit Dimensions,Size 55、88 and 107

结构 1.1　Design 1.1

不带减速齿轮　With out adaptor gear

带辅助驱动　With auxiliary drive

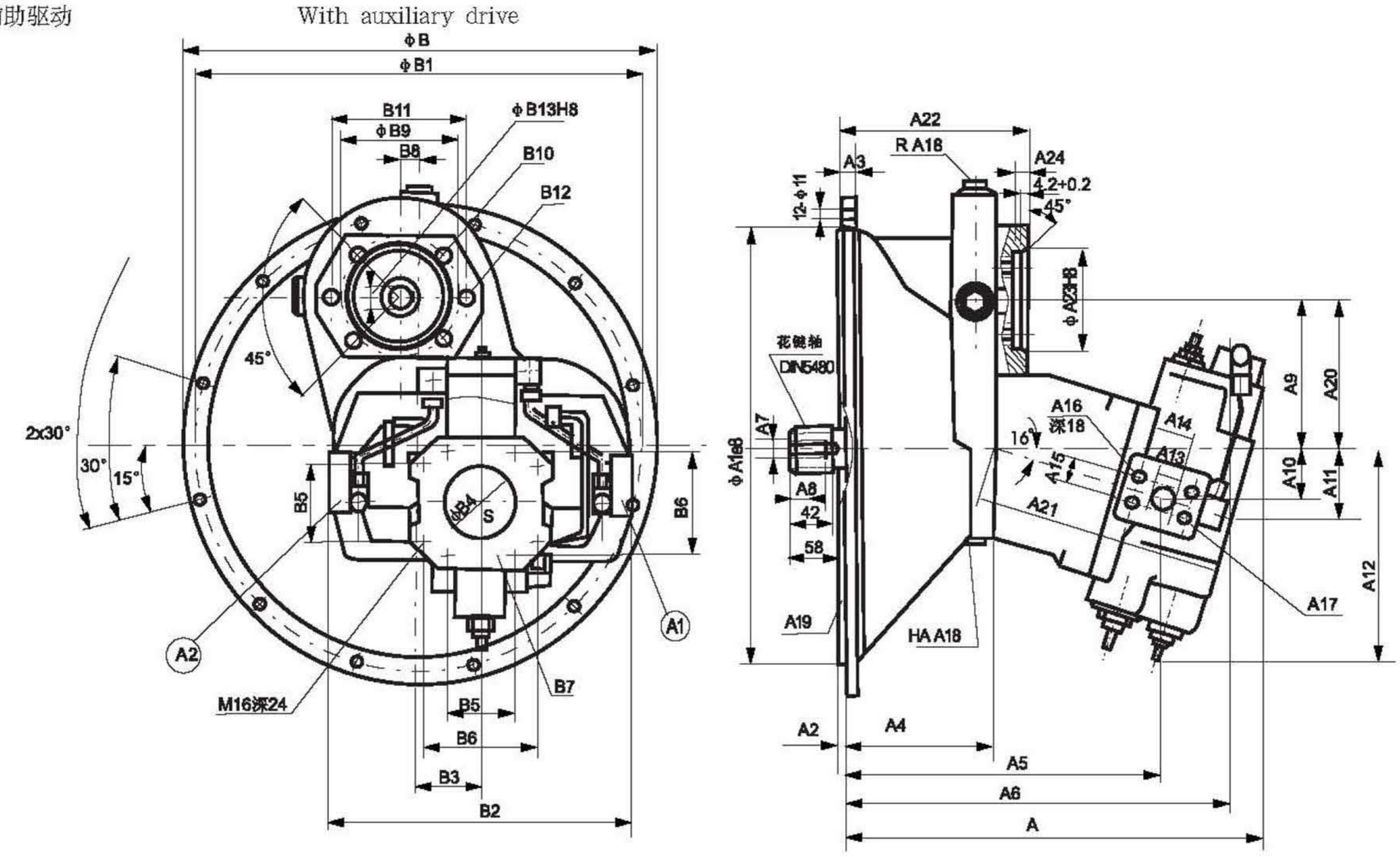

A1：A2 工作油口　Service lines

S ＝吸油油口　Suction line

R ＝排气口（堵死）　air bleed(plugged)

HA ＝泄油口（堵死）　oil drain(plugged)

规格 Size	A	A1	A2	A3	A4	A5	A6	A7	A8	A9	A10	A11	A12	A13	A14	A15	A16	深 deep	A17 法兰 Flange
55	361	361.95	5	12	130	273	331	M12	28	92	41	57.6	179.5	20	50.8	23.8	M10	17	SAE3/4″ 42MPa(6000Psi)
80	418	409.575	6	12	144	310	383	M16	36	107.3	47.2	68.5	214.3	25	57.2	27.8	M12	17	SAE1″ 42MPa(6000Psi)
107	443	447.7	6	16	157	385	407	M16	36	115.6	51	71.6	216.3	25	57.2	27.8	M12	18	SAE1″ 42MPa(6000Psi)

规格 Size	A18	A19 法兰 Flange	A20	A21	A22	A23	A24	B	B1	B2	B3	B4	B5	B6	B7 法兰 Flange	B8	B9
55	M18 × 1.5	SAE4	116	209	66.5	80	11.5	407	381	270	54.25	76	61.9	106.4	SAE3″ 3.5MPa		
80	M22 × 1.5	SAE3	140.08	248.5	180	100	12	456	428.625	290	60.5	102	77.8	130.2	SAE4″ 3.5MPa	20	125
107	M22 × 1.5	SAE2	150	260	192	100	12	495	466.7	320	67	102	77.8	130.2	SAE4″ 3.5MPa	20	125

规格 Size	B10	深 deep	B11	B12	深 deep	B13	平键 CB1096 Keyed	花键 DIN5480 Splined	重量 Weight Kg
55			109	M10	16	18	键 6 × 25	W40 × 2 × 18 × 9g	72
80	M10	16	140	M14	20	25	键 8 × 15	W45 × 2 × 21 × 9g	100
107	M10	16	140	M14	20	25	键 8 × 15	W50 × 2 × 24 × 9g	135

Installation Dimensions

元件尺寸，规格55、80、107、125和160
结构1.2
不带减速齿轮
带辅助驱动

Unit Dimensions,Size55、80、107、125 and 160.
Design1.2
Without adaptor gear
With auxiliary drive

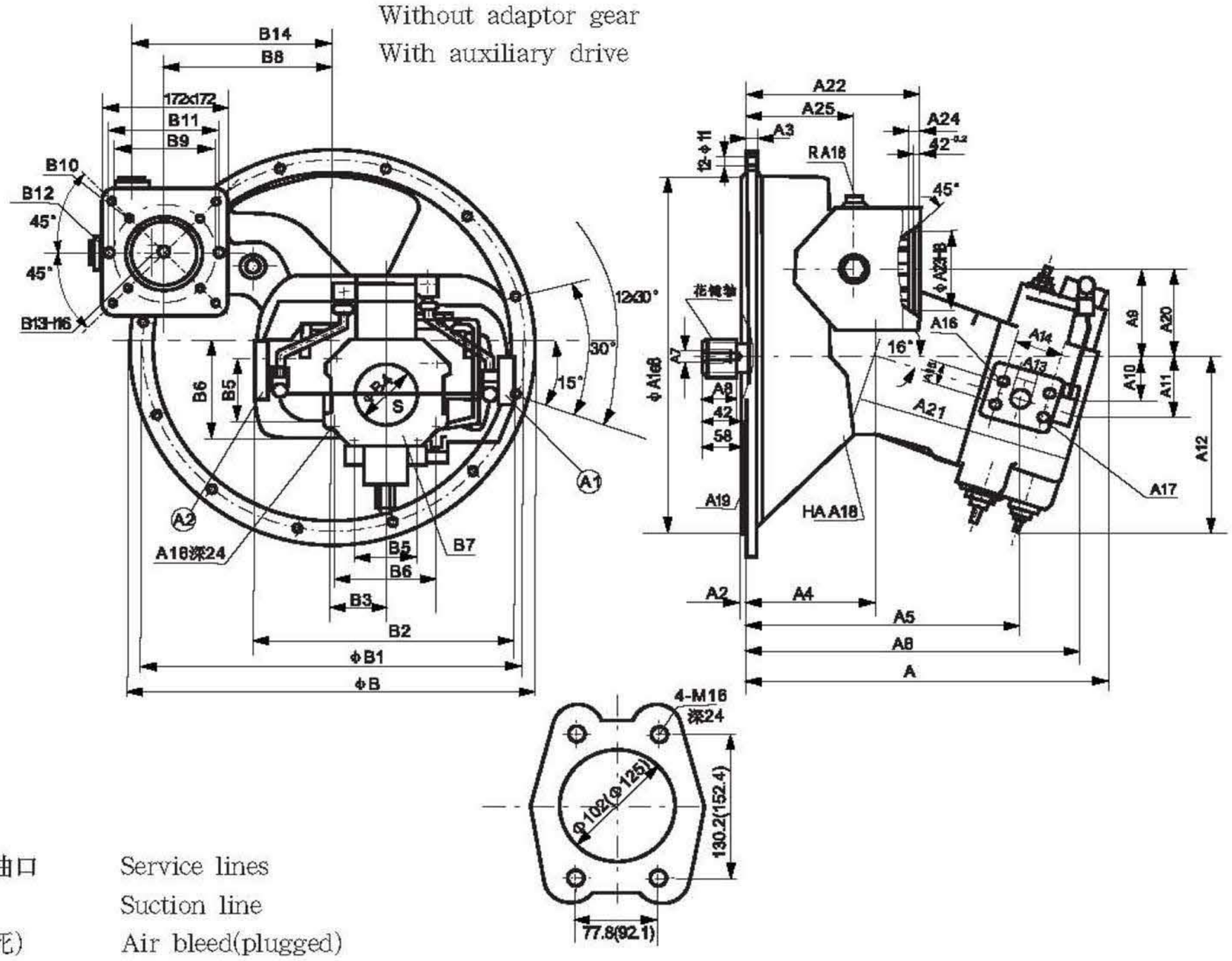

A1,A2 =工作油口　Service lines
S =吸油口　Suction line
R =排气口(堵死)　Air bleed(plugged)
HA =泄油口 (堵死)　Oil drain(plugged)

A8V125(160)吸油口 Suction line

规格 size	A	A1	A2	A3	A4	A5	A6	A7	A8	A9	A10	A11	A12	A13	A14	A15	A16	深 Deep	A17法兰 Flange
55	361	361.95	5	12	130	273	331	M12	28	92	41	57.6	179.5	20	50.8	23.8	M10	17SAE3/4″	42MPa(6000Psi)
80	418	409.575	6	12	144	310	383	M16	36	107.3	47.2	68.5	214.3	25	57.2	27.8	M12	17SAE1/4″	42MPa(6000Psi)
107	443	447.7	6	16	157	385	407	M16	36	115.6	51	71.6	216.3	25	57.2	27.8	M12	18SAE1/4″	42MPa(6000Psi)
125	426	447.7	6	16	157	307.7	354.4	M16	36	272	47.5	62.2	222	25	57.2	27.8	M12	18SAE1″	42MPa(6000Psi)
160	542	511.2	6	20	221	421	473	M20	42	224	57	72	257	32	31.8	66.7	M14	19SAE1 1/4″	42MPa(6000Psi)

规格 size	A18	A19法兰 Flange	A20	A21	A22	A23	A24	A25	B	B1	B2	B3	B4	B5	B6	B7法兰 Flange	
55	M18 × 1.5	SAE4							407	381	270	54.25	76	61.9	106.4	SAE3″	3.5MPa
80	M22 × 1.5	SAE3	110	240.5	211	100	12	127	456	428.625	290	60.5	102	77.8	103.2	SAE4″	3.5MPa
107	M22 × 1.5	SAE2	108	260	214	100	12	137	495	466.7	320	67	102	77.8	130.2	SAE4″	3.5MPa
125	M22 × 1.5	SAE2	108	157	214	100	12	137	495	466.7	320	67	102			SAE4″	3.5MPa
160	M22 × 1.5	SAE1	162.6	208	280	110	25		555	530.2	384	85.5	125			SAE5″	3.5MPa

规格 Size	B8	B9	B10	深 deep	B11	B12	深 deep	B13	平键CB1096 Keyed	花键DIN5480 Splined	重量Kg Weight
55										W40 × 2 × 18 × 9g	80
80	175	125	M10	16	140	M14	20	25	8 × 36	W45 × 2 × 21 × 9g	110
107	198.5	125	M10	16	140	M14	20	25	8 × 45	W50 × 2 × 24 × 9g	145
125	198.5	125	M10	16	140	M14	20	25	8 × 45	W50 × 2 × 24 × 9g	180
160	202.8	138	M10	16	160	M14	20	25	8 × 45	W60 × 2 × 28 × 9g	200

元件尺寸，规格55、80和107
结构2–5
结构2
带减速齿轮
不带辅助驱动

Unit Dimensions Size 55、80 and 107
Designs 2–5
Design 2
with adaptor gear
without auxiliary drive

结构3
带减速齿轮
带辅助驱动和安装定量泵A2F23.28
(带花键轴)的联轴节

Design 3
with adaptor gear
with auxiliary drive and coupling
for mounting of fixed pump A2F23.28
(with splined shaft)A.

结构4
带减速齿轮
带辅助驱动和安装齿轮泵
(带锥轴和螺钉固定)的联轴节

Design 4
with adaptor gear
with auxiliary drive and coupling for mounting
of gear pump
(with tapered shaft and bolt–on fixing)

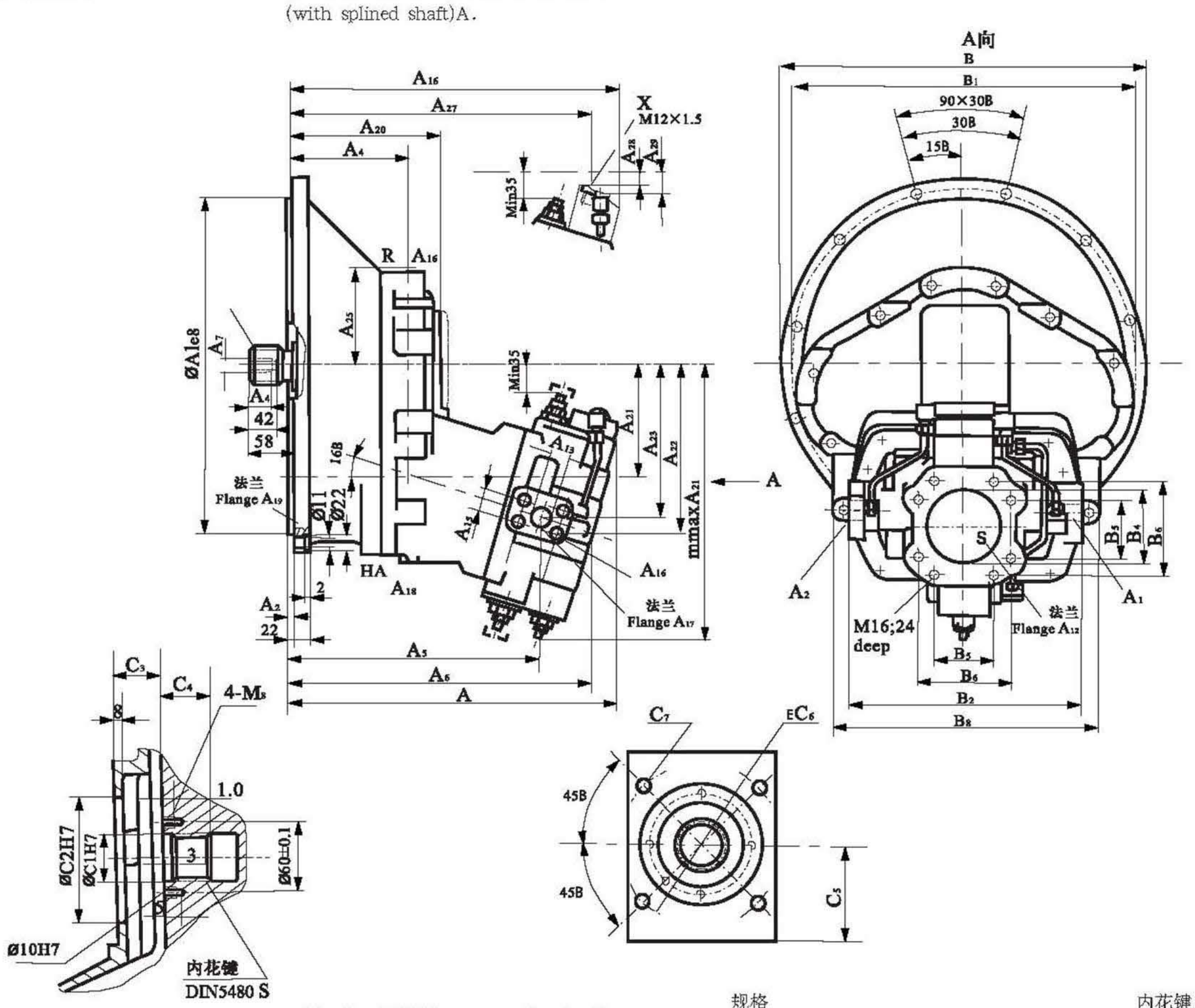

A1,A2	=工作油口	Service lines
S	=吸油口	Suction line
R	=排气口(堵死)	Air bleed(plugged)
HA	=泄油口（堵死）	Oil drain(plugged)
X	=先导口	pilot port

规格								内花键DIN5480
Size	C1	C2	C3	C4	C5	C6	C7	Splined hub Profile
55	34	80	42.5	33	55	100	M8深 17	N30 × 2 × 14 × 9H
80	40	105	42.5	41	60	125	M10深 12.5	N35 × 2 × 16 × 9H
107	40	105	42	41	62	125	M10深 12.5	N35 × 2 × 16 × 9H

规格													深	A17法兰		A19法兰		
size	A	A1	A2	A4	A5	A6	A7	A8	A13	A14	A15	A16	deep	Flange	A18	Flange	A20	A21
55	361	361.95	5	130	273	331	M12	28	20	50.8	23.8	M10	17	SAE3/4" 42MPa(6000Psi)	M18 × 1.5	SAE4	176	312
80	418	409.575	6	144	310	383	M16	36	25	57.2	27.8	M12	17	SAE" 42MPa(6000Psi)	M22 × 1.5	SAE3	191	344
107	443	447.7	6	157	335	407	M16	36	25	57.2	27.8	M12	17	SAE1" 42MPa(6000Psi)	M22 × 1.5	SAE2	204	360

规格														B7法兰		花键 Splined shaft	重量 Weight
Size	A22	A23	A24	A25	A26	A27	A28	A29	B	B1	B2	B4	B5	B6	flange	B8	DIN 5480	Kg
55	181	164.3	123.3	115	370	322	6	8	407	381	270	76	61.9	106.4	SAE3" 3.5MPa(500Psi)	320	W40 × 2 × 18 × 9g	100
80	198.2	177.5	129.7	115	420	382	7	12.5	456	428.625	290	102	77.8	130.2	SAE4" 3.5MPa(500Psi)	340	W45 × 2 × 21 × 9g	130
107	215.3	194.7	143.7	128	453	406	21.5	27	495	466.7	320	102	77.8	130.2	SAE4" 3.5MPa(500Psi)	360	W50 × 2 × 24 × 9g	165